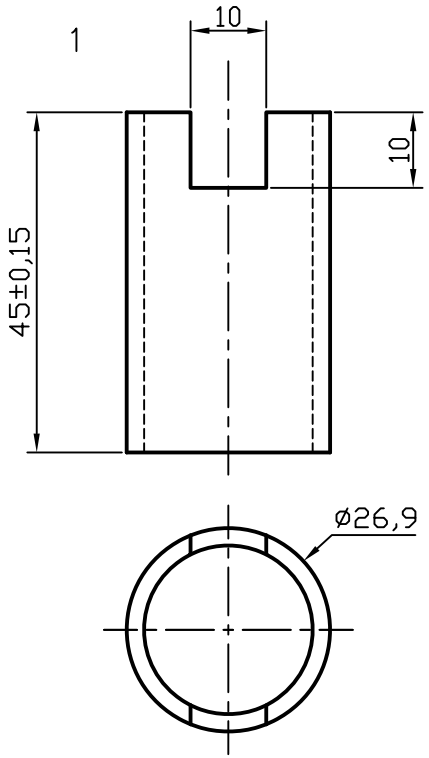

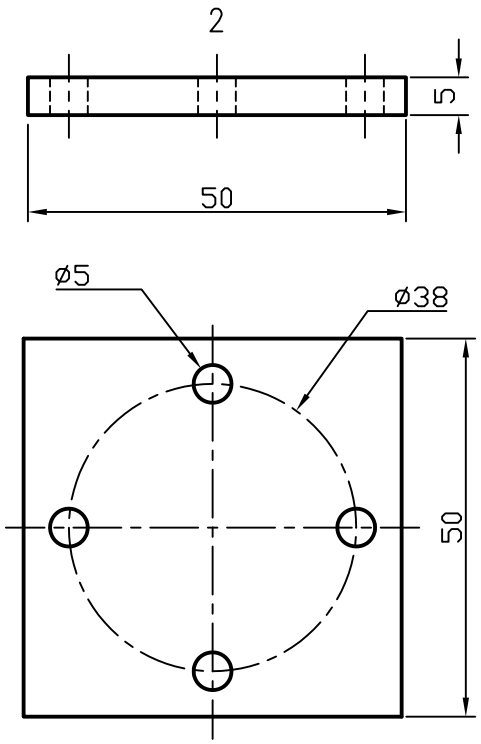

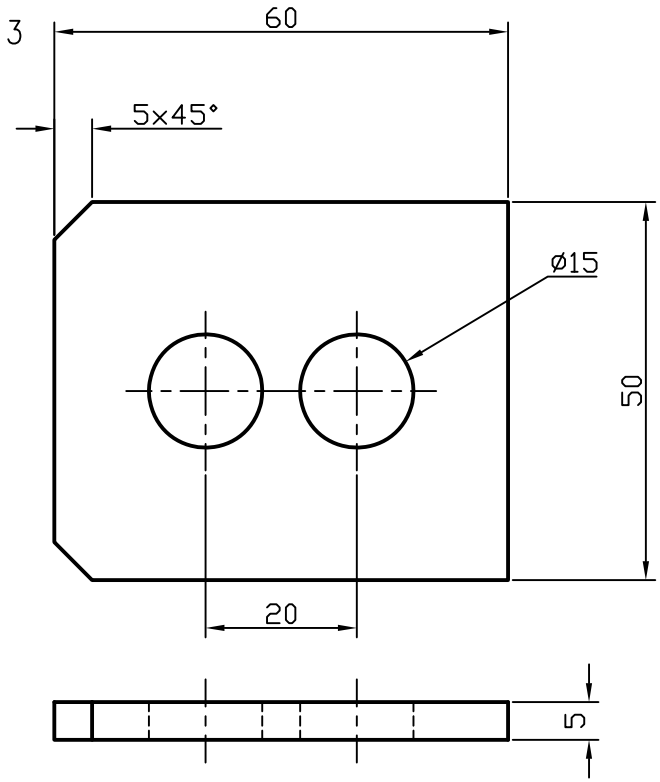

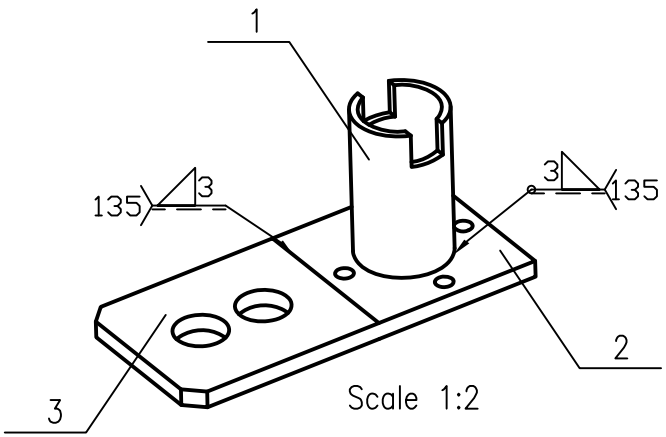

QT.	DESIGNATION	RULE/DRAW	MATERIAL	POS.	PRODUCT/DIMENSIONS	WEIGHT	OBS.
1	Part 3		CK 45	3	5x50x60		
1	Part 2		CK 45	2	5x50x50		
1	Part 1			1	ø26,9x45		

		DATE	NAME
TOLERANCES ISO.2768-MK	DRAW.		
MATERIAL	SEEN		
	APROV.		
			SCALE 1/1